2026 JULY 19–22 VANCOUVER, BC
JOINT AAPM | COMP MEETING

Precision Dose Calculator Tissue to Water Dose Ratios for Radixact Plans

B Willett[1]; E Chao[1]; N Cudworth[1]
[1]Accuray Inc., Madison, WI, USA

ABSTRACT

Tissue to water dose ratios are investigated for the Accuray Precision dose calculator for large and small tissue volumes. Reference dose ratios are obtained from hand calculations. Precision ratios are calculated using virtual phantoms along with a standalone Precision dose calculator. For large tissue volumes, Precision dose ratios are correlated with reference dose ratios, but generally higher. Small volumes show near unity dose ratios that decay to the large volume values as the tissue volume increases. Together these results imply Precision dose calculations are not dose to water nor dose to tissue. Rather they fall somewhere in between and exhibit a tissue volume dependence.

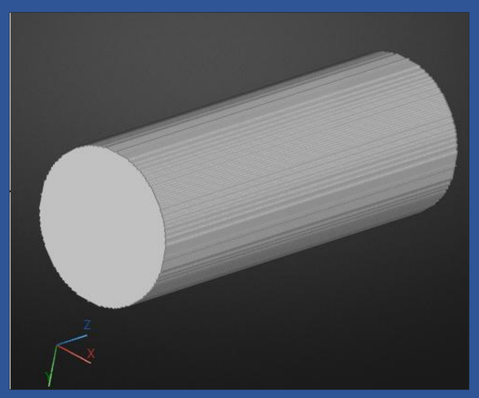

Figure 1. Large Volume Virtual Phantom

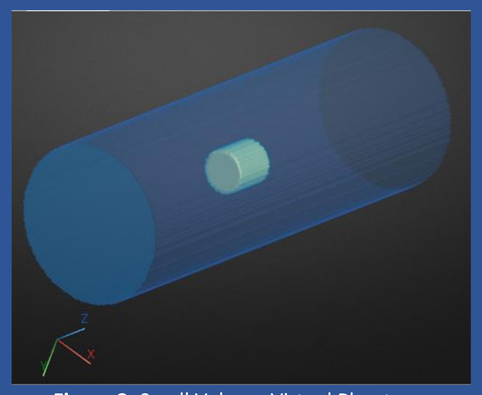

Figure 2. Small Volume Virtual Phantom

REFERENCES

1. https://physics.nist.gov/PhysRefData/XrayMassCoef/tab4.html
2. Attix FH. 2004. Introduction to Radiological Physics and Radiation Dosimetry. 1st Ed, Wiley-VCH Verlag GmbH & Co. KGaA

CONTACT

Ben Willett
Accuray
1240 Deming Way, Madison, WI, 53717, USA
bwillett@accuray.com

INTRODUCTION

A clinically relevant question regarding the Accuray Precision TPS is whether the calculated dose is with respect to tissue or water for Radixact plans. To gain some insight into this question we investigate the behavior of tissue to water dose ratios under constant fluence conditions for Precision calculations compared to reference hand calculations. Two scenarios are considered: 1) large tissue volumes, and 2) small tissue volumes. For large tissue volumes, the calculation point is at a depth greater than or equal to Dmax in all dimensions. In contrast, the small volume case occurs when the depth to the calculation point is less than Dmax.

METHODS AND MATERIALS

Fluence & Attenuation Data:
- Radixact Beam Model
- NIST mass energy absorption coefficient data[1]

Large Tissue Volume Case:
- Reference dose ratios were calculated as the ratio of mass energy absorption coefficients at the mean energy of the Radixact beam model's energy fluence spectrum[2]
- Precision dose ratios were calculated as follows:
  - Virtual phantoms were created as a set of 200 mm long cylinders with radii varying between 6 and 24 mm and densities varying between 2 and 0.5 g/cc. The radiological depth of each cylinder remained constant at 12 mm (~Dmax). The cylinder was placed with its axis at isocenter and parallel to the IECf-Y direction. Figure 1 shows an example
  - A delivery plan was created consisting of a 60 second rotational delivery with a 5x40 cm field and no couch movement.
  - Dose ratios for each cylinder were calculated by recording the dose at the center voxel of a cylinder and dividing by the dose at the center of the water cylinder.
  - The dose ratio for each tissue was interpolated from the cylinder calculations at the tissue's mass density.

Small Tissue Volume Case:
- Tissues for the small volume case focused on water and bone. Precision dose ratios were calculated as follows:
  - Virtual phantoms were created as a set of bone cylinders (2 g/cc) coaxially embedded in a 200 mm long water cylinder (1 g/cc). The bone cylinder radii ranged from 0 to 7 mm and the surrounding annulus of water was varied such that the radiological depth to the center voxel was the same 14 mm for all cylinders. The height of the bone cylinder was set to be twice the radius. Figure 2 shows an example
  - The large volume case delivery plans were reused for the small volume calculations.
  - Dose ratios for each cylinder were calculated by recording the dose at the center voxel of a cylinder and dividing by the dose at the center of the water cylinder (bone cavity radius = 0 mm).

Note that the setup of the virtual phantoms and delivery plans were chosen to give the same fluence at the center of each cylinder.

RESULTS

Large Tissue Volume Case:
- Table 1 lists tissue to water dose ratios for adipose, bone, muscle and soft tissue. Adipose, muscle, and soft tissue are closer to dose to water than dose to tissue, while bone is closer to dose to tissue than dose to water.

Small Tissue Volume Case:
- Figure 3 plots the bone to water dose ratio against the radius of the bone cylinder. The bone to water dose ratio approaches 1.0 as the volume radius approaches zero. For a 1mm radius the dose ratio was 0.9764, and for a 2mm radius it was 0.965. As the radius approaches Dmax, the dose ratio approaches a value similar to the uniform tissue case.

Tissue	Reference	Precision
Adipose	1.0020	1.0006
Bone	0.9263	0.9594
Muscle	0.9912	0.9978
Soft Tissue	0.9908	0.9973

Table 1. Dose Ratios for the Large Volume Case.

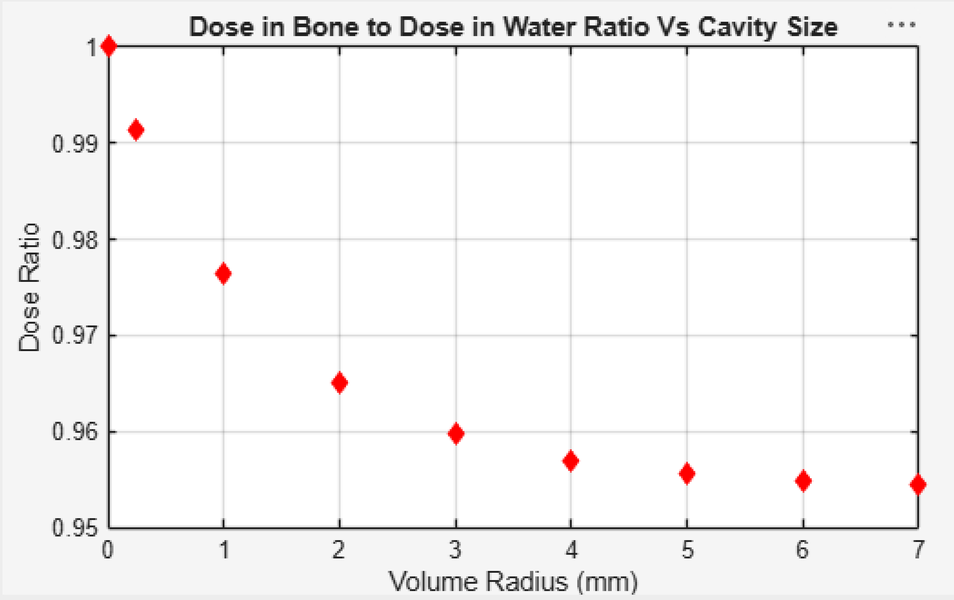

Figure 3. Bone to Water Dose Ratios for Small Volume Case.

DISCUSSION

Large Tissue Volume Case:
It can be shown that for the large volume case, the Precision dose ratio depends on the ratio of the tissue to water mass attenuation coefficients. Compare this to the reference dose ratios which depend on the ratio of mass energy absorption coefficients. The two ratios are correlated but differ in value. Additionally, Precision represents tissue mass attenuation coefficients as a combination of water and bone mass attenuation coefficients which may further affect the resulting ratio. Consequently, Precision doses are neither dose to water nor dose to tissue.

Small Tissue Volume Case:
To explain the dependence of the bone to water dose ratio on the radius of the bone cylinder, we turn to Burlin cavity theory[2] which provides a model for dose ratios where the depth of the calculation point is less than Dmax. Here the dose ratio is modeled as a combination of the stopping power ratio and mass energy absorption coefficient ratio. A dimensionless parameter, ϵ, controls the weighting of the two and for very small volumes $\epsilon \approx 1$, and for large volumes $\epsilon \approx 0$. In Precision calculations, stopping power information is contained in a kernel that describes the spatial deposition of dose from a TERMA point. But since the kernel is with respect to water for all dose calculations, the stopping power ratio always equals 1. Replacing the mass energy absorption coefficient ratio with the mass attenuation coefficient ratio gives us a Burlin-style model for Precision,

$$Dose\ Ratio_{Precision} = \epsilon + (1-\epsilon)\frac{\left(\frac{\mu}{\rho}\right)_{Tissue}}{\left(\frac{\mu}{\rho}\right)_{Water}}$$

As the bone cylinder radius approaches zero, ϵ approaches one and the bone to water dose ratio also approaches one. As the bone cylinder radius approaches Dmax, ϵ approaches zero and the bone to water dose ratio approaches values seen in the large volume case in Table 1.. Therefore, the Precision dose approaches dose to water as the tissue size approaches zero and converges toward values seen in the large tissue volume case as the tissue size approaches Dmax.

CONCLUSIONS

Accuray Precision doses for Radixact plans depend on the tissue volume. Small volume doses are near dose to water and converge to values somewhere between dose to water and dose to tissue as the volume radius approaches Dmax.

Classification://ACCURAY/CONFIDENTIAL—Proprietary Information/Limit External Distribution
© Poster Template by Genigraphics® 1.800.790.4001 www.genigraphics.com